Current part is item (4) on diagram. Available at www.oshkoshequipment.com

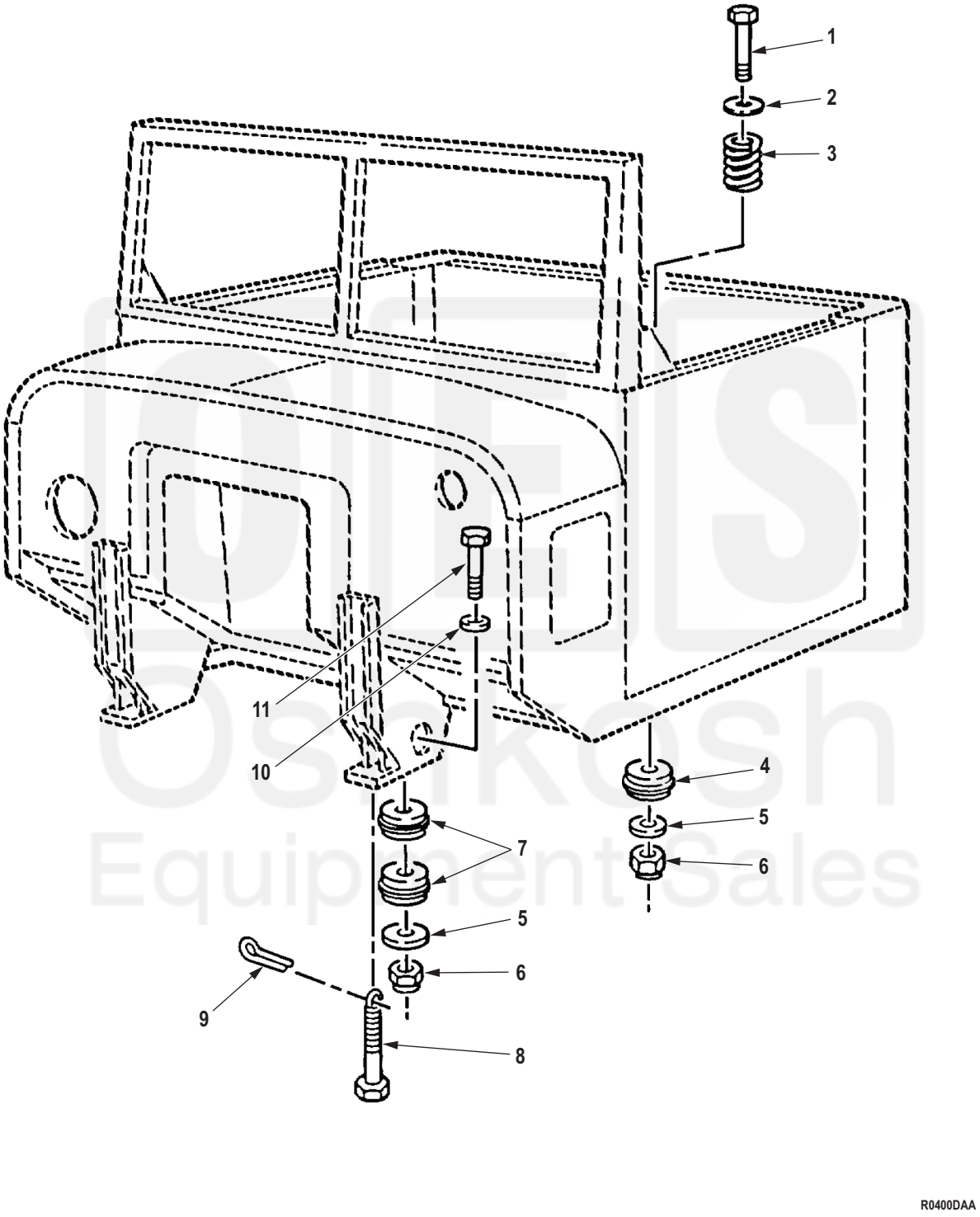

Figure 381. Cab Assembly Mounting Hardware.

Current part is item (4) on diagram. Available at www.oshkoshequipment.com

Current part is item (4) on diagram. Available at www.oshkoshequipment.com

(1) ITEM NO.	(2) SMR CODE	(3) NSN	(4) CAGEC	(5) PART NUMBER	(6) DESCRIPTION AND USABLE ON CODE (UOC)	(7) QTY
					GROUP 1801 BODY, CAB, HOOD, AND HULL ASSEMBLIES.	
					FIG. 381. CAB ASSEMBLY MOUNTING HARDWARE.	
1	PAFZZ	5306-01-183-6970	19207	12302700	BOLT,SHOULDER UOC: DAC,DAD,DAE,DAF,DAG,DAH,DAJ,DAL,DAW,DAX,V14,V15,V16,V17,V18,V19,V20,V21,V22,V24,ZAA,ZAB,ZAC,ZAD,ZAE,ZAF,ZAG,ZAH,ZAJ,ZAL	2
2	PAFZZ	5310-00-823-8803	96906	MS27183-21	WASHER,FLAT UOC: DAC,DAD,DAE,DAF,DAG,DAH,DAJ,DAL,DAW,DAX,V14,V15,V16,V17,V18,V19,V20,V21,V22,V24,ZAA,ZAB,ZAC,ZAD,ZAE,ZAF,ZAG,ZAH,ZAJ,ZAL	2
3	PAFZZ	5360-00-476-9339	19207	7529293	SPRING,HELICAL,COMP UOC: DAC,DAD,DAE,DAF,DAG,DAH,DAJ,DAL,DAW,DAX,V14,V15,V16,V17,V18,V19,V20,V21,V22,V24,ZAA,ZAB,ZAC,ZAD,ZAE,ZAF,ZAG,ZAH,ZAJ,ZAL	2
4	PAFZZ	5342-00-040-2073	19207	7521436	MOUNT,RESILIENT UOC: DAC,DAD,DAE,DAF,DAG,DAH,DAJ,DAL,DAW,DAX,V14,V15,V16,V17,V18,V19,V20,V21,V22,V24,ZAA,ZAB,ZAC,ZAD,ZAE,ZAF,ZAG,ZAH,ZAJ,ZAL	2
5	PAFZZ	5310-01-109-6753	19207	12256962-1	WASHER,FLAT UOC: DAC,DAD,DAE,DAF,DAG,DAH,DAJ,DAL,DAW,DAX,V14,V15,V16,V17,V18,V19,V20,V21,V22,V24,ZAA,ZAB,ZAC,ZAD,ZAE,ZAF,ZAG,ZAH,ZAJ,ZAL	4
6	PAFZZ	5310-00-488-3888	81349	M45913/3-8FG8C	NUT,SELF-LOCKING,HE UOC: DAC,DAD,DAE,DAF,DAG,DAH,DAJ,DAL,DAW,DAX,V14,V15,V16,V17,V18,V19,V20,V21,V22,V24,ZAA,ZAB,ZAC,ZAD,ZAE,ZAF,ZAG,ZAH,ZAJ,ZAL	4
7	PAFZZ	5342-01-319-5383	57839	K500-63	MOUNT,RESILIENT,WEA UOC: DAC,DAD,DAE,DAF,DAG,DAH,DAJ,DAL,DAW,DAX,V14,V15,V16,V17,V18,V19,V20,V21,V22,V24,ZAA,ZAB,ZAC,ZAD,ZAE,ZAF,ZAG,ZAH,ZAJ,ZAL	4

Current part is item (4) on diagram. Available at www.oshkoshequipment.com

Current part is item (4) on diagram. Available at www.oshkoshequipment.com

(1) ITEM NO.	(2) SMR CODE	(3) NSN	(4) CAGEC	(5) PART NUMBER	(6) DESCRIPTION AND USABLE ON CODE (UOC)	(7) QTY
8	PAFZZ	5306-01-134-6540	19207	12277353	BOLT,MACHINE UOC: DAC,DAD,DAE,DAF,DAG,DAH,DAJ,DAL,DAW,DAX,V14,V15,V16,V17,V18,V19,V20,V21,V22,V24,ZAA,ZAB,ZAC,ZAD,ZAE,ZAF,ZAG,ZAH,ZAJ,ZAL	2
9	PAFZZ	5315-00-236-8359	04627	15223	PIN,COTTER UOC: DAC,DAD,DAE,DAF,DAG,DAH,DAJ,DAL,DAW,DAX,V14,V15,V16,V17,V18,V19,V20,V21,V22,V24,ZAA,ZAB,ZAC,ZAD,ZAE,ZAF,ZAG,ZAH,ZAJ,ZAL	2
10	PAFZZ	5310-01-109-6754	19207	12256962	WASHER,FLAT UOC: DAC,DAD,DAE,DAF,DAG,DAH,DAJ,DAL,DAW,DAX,V14,V15,V16,V17,V18,V19,V20,V21,V22,V24,ZAA,ZAB,ZAC,ZAD,ZAE,ZAF,ZAG,ZAH,ZAJ,ZAL	2
11	PAFZZ	5306-01-181-5018	19207	12256674-3	BOLT,SHOULDER UOC: DAC,DAD,DAE,DAF,DAG,DAH,DAJ,DAL,DAW,DAX,V14,V15,V16,V17,V18,V19,V20,V21,V22,V24,ZAA,ZAB,ZAC,ZAD,ZAE,ZAF,ZAG,ZAH,ZAJ,ZAL	2

END OF FIGURE

Current part is item (4) on diagram. Available at www.oshkoshequipment.com